# Vision Datum

## LEO Series Area Scan Cameras

GiGE VISION

## LEO2 720S-313gm/gc

- 0.4MP @312.9 fps
- Adopts GigE interface and max. transmission distance of 100 meters without relay
- Compatible with GigE Vision Protocol, GenICam Standard, and the third-party software based on these protocol and standard
- Support Windows、Linux
- Lower power consumption and flexible mounting from 4 sides

**Applied range** • Defect Detection • Surface Patch Detection • Visual Positioning • Size Measuring • QR Code Reading • VR/AR • Logistics

| Camera | LEO2 720S-313gm/gc |
|---|---|
| Resolution [H*V] | 720 × 540 |
| Sensor | Sony IMX287 |
| Sensor Size | 1/2.9" |
| Sensor Tecchnology | CMOS, Global |
| Pixel Size [μm] | 6.9 × 6.9 |
| Frame Rate [fps] | 312.9 |
| Exposure Time | 1μs~10s |
| Dynamic Range | 73.6dB |
| Mono/Color | Mono/Color |
| Image Format | Monochrome: Mono8/10/10p/12/12p<br>Color: Mono 8/10/12,Bayer RG 8/10/10p/12/12p, YUV422Packed,YUV422_YUYV_Packed,RGB 8,BGR 8 |
| Interface | GigE |
| Synchronization | Via hardware trigger、software trigger or free run mode |
| Housing Size [l*w*h] | 29.0 × 29.0 × 42.0 mm (100g) |
| Operating Temperature | -30~70 ° C (Storage), -30~60° C (Working) |
| Lenses Mount | C-Mount |
| Digital I/O | Opto-isolated input x 1, opto-isolated output x 1, and bi-directional custom non-isolated I/O x 1 |
| Power Input | DC 9-24V, Supporting PoE |
| Power Consumption | Monochrome: 12V @2.2W<br>Color: 12V @2.4W |
| Driver | LEO Series Camera Software Suite (iDatum) or 3rd party GigE Vision Software |
| Operating System | Windows,Linux |
| Conformity | GigE Vision,GenICam |

## Spectral Response

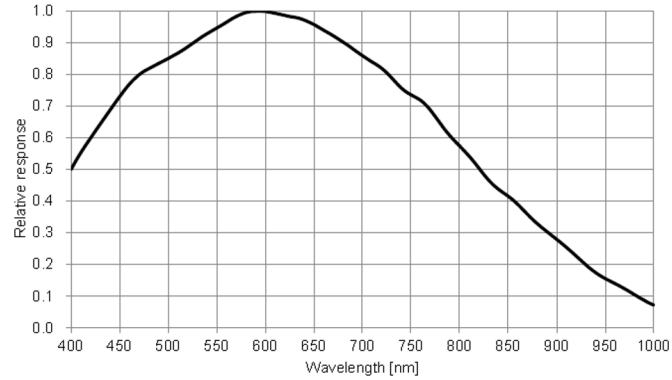


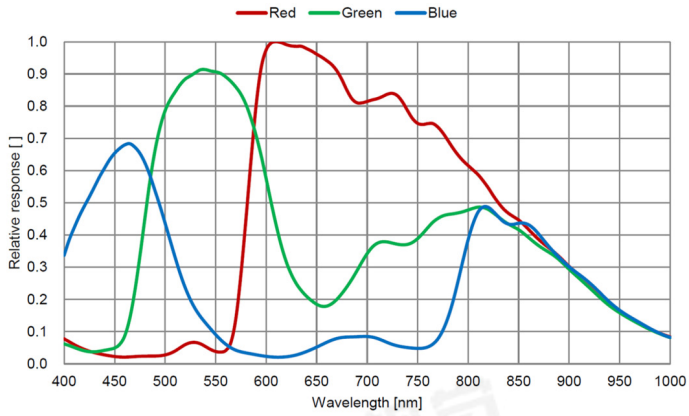


## Dimensions

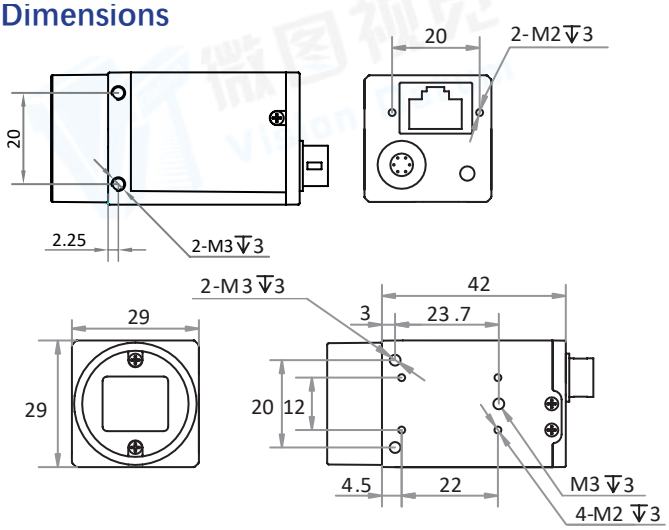


No.8, Xiyuan 9th Road West Lake District, Hangzhou 310030 China
Tel: 86-571-86888309, 86-571-86888307
Web: www.visiondatum.com Email: market@visiondatum.com